Polymak®

**PMVC15L** VACUUM CLEANER

| | |
|---|---|
| Voltage/Frequency: | 220V/50Hz |
| Power: | 800W |
| Tank Cap: | 15L |
| Noise: | 80db |
| Vacuum Degree: | ≥16Kpa |

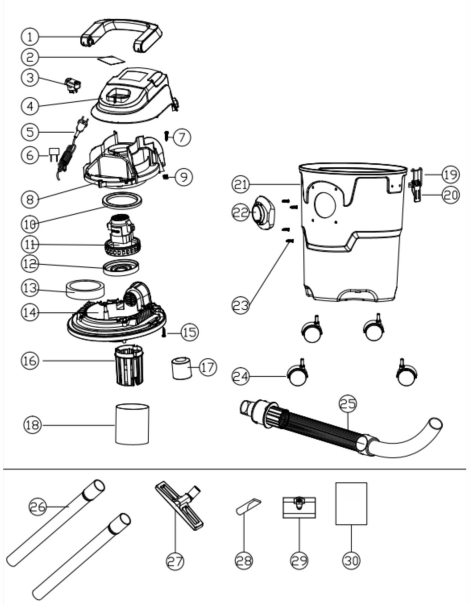




Polymak®

## PMVC15L SPARE PARTS LIST

| No | Parts Name | Pcs | Seri No | INR | No | Parts Name | Pcs | Seri No | INR |
|---|---|---|---|---|---|---|---|---|---|
| 1 | The handle | 1 | | | | | | | |
| 2 | Label | 1 | | | | | | | |
| 3 | Switch | 1 | | | | | | | |
| 4 | The top cover | 1 | | | | | | | |
| 5 | The power cord | 1 | | | | | | | |
| 6 | Capacitance | 1 | | | | | | | |
| 7 | Screw 4*16 | 6 | | | | | | | |
| 8 | The motor cover | 1 | | | | | | | |
| 9 | Line pressing board | 1 | | | | | | | |
| 10 | Sealing ring on motor | 1 | | | | | | | |
| 11 | Motor | 1 | | | | | | | |
| 12 | Motor lower seal ring | 1 | | | | | | | |
| 13 | Air duct sponge | 1 | | | | | | | |
| 14 | Bottom cover | 1 | | | | | | | |
| 15 | Screw 4*20 | 4 | | | | | | | |
| 16 | Bottom cover basket | 1 | | | | | | | |
| 17 | The relief valve | 1 | | | | | | | |
| 18 | Sponge filter | 1 | | | | | | | |
| 19 | Clamps hook | 2 | | | | | | | |
| 20 | Clamps | 2 | | | | | | | |
| 21 | Tank | 1 | | | | | | | |
| 22 | Suction block | 1 | | | | | | | |
| 23 | Suction block screw | 4 | | | | | | | |
| 24 | Wheels | 4 | | | | | | | |
| 25 | Hose | 1 | | | | | | | |
| 26 | Plastic tube | 2 | | | | | | | |
| 27 | Brush | 1 | | | | | | | |
| 28 | Crevice tool | 1 | | | | | | | |
| 29 | Paper bag | 1 | | | | | | | |
| 30 | Manual | 1 | | | | | | | |
| 31 | | | | | | | | | |
| 32 | | | | | | | | | |
| 33 | | | | | | | | | |
| 34 | | | | | | | | | |
| 35 | | | | | | | | | |
| 36 | | | | | | | | | |
| 37 | | | | | | | | | |