Polymak®

PM700BRV ELECTRIC BLOWER

Air flow:	2.3m³/min
No load speed:	0-13000r/min
Power:	700W
Weight:	1.4kg

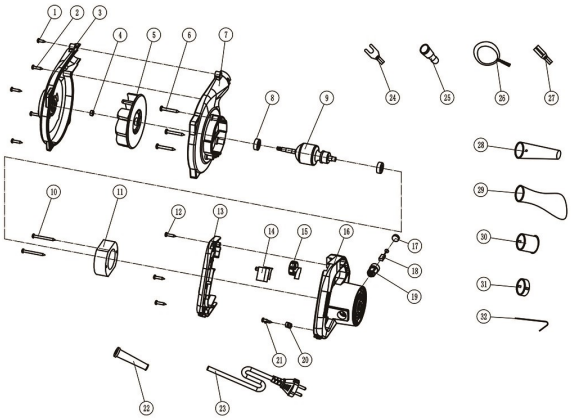

Polymak®

PM700BRV SPARE PARTS LIST

No	Parts Name	Pcs	INR
1	Cross recessed pan head slotted screws SB4X12	1	
2	Cross recessed pan head slotted screws SB4X14	1	
3	windward plate	1	
4	M6 locknut	1	
5	blades	1	
6	Cross recessed pan head tapping screw ST5X25	1	
7	downwind disk	1	
8	608 Bearing	1	
9	rotor	1	
10	Cross recessed pan head tapping screw ST5X35	1	
11	Stator	1	
12	Cross recessed pan head slotted screws SB4X16	1	
13	handle cover	1	
14	switch	1	
15	speed switch	1	
16	housing	1	
17	Brush cover	1	
18	carbon brush	1	
19	brush grip	1	
20	Line pressing board	1	
21	Cross recessed pan head tapping screw ST4X14	1	
22	sheathed lines	1	
23	cable	1	
24	U-shaped wire clasp	1	
25	Lead wire connection cap	1	
26	Blower tension spring	1	
27	6-30 copper strip	1	
28	pipe	1	
29	bag	1	
30	38 joint	1	
31	52 joint	1	