Polymak

ELECTRIC BLOWER

Air flow :	2.5m³/min
No load speed:	0-13000r/min
Power:	400W
Net weight:	1.2KG

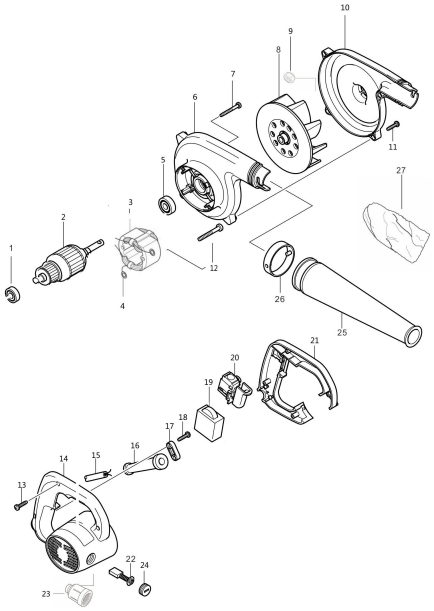

Polymak

SPARE PARTS LIST

No	Name Of Parts	Pcs	Seri No	INR
1	Ball Bearing 608			
2	Rotor Assy			
3	Stator			
4	Stator Spring			
5	Ball Bearing 608			
6	Screw 5x35			
7	Right Housing			
8	Screw 4x16			
9	Fan			
10	Lock Nut ¢6			
11	Lift Housing			
12	Screw 4x16			
13	Rubber Blower Pipe			
14	Rubber Tube Ring			
15	Handle			
16	Inductors			
17	Switch			
18	Speed Controler			
19	Screw 4x14			
20	Cork Support			
21	Plug Cord			
22	Rubber Tube			
23	Screw 4x14			
24	Brush Holder			
25	Carbon Brush			
26	Bursh Cap			
27	Collection Dust Bag			