Polymak®

PM255BMS-DY

MITER SAW

Voltage/ Frequency:	220V 50/60Hz
Input Power:	1400W
No-Load Speed:	4600r/min
Blade Dia:	255mm

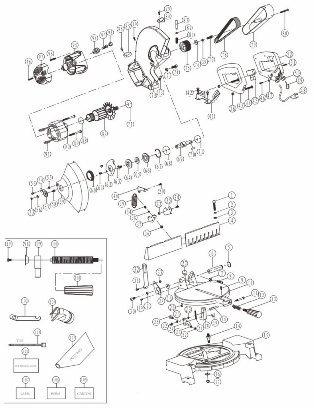

Polymak®

PM255BMS-DY SPARE PARTS LIST

No	Parts Name	Pcs	Seri No	INR
1	Screw m8*40			
2	Spring washer ф8			
3	Flat washer ф8			
4	Cross bar			
5	Washer ф17			
6	Transparent cover retaining plate			
7	Screw m8			
8	Screw m8*35			
9	Screw m4*14			
10	Lock plate			
11	Screw m6*45			
12	Spring			
13	Small handle			
14	Spring			
15	Base			
16	Washer ф8			
17	Screw m8			
18	Scale pointer			
19	Pin			
20	7 plate			
21	Spring			
22	Screw m6			
23	Washer ф6			
24	Lock swith			
25	Screw			
26	Pin			
27	Block			
28	Cross plate			
29	Springm5*12			
30	Springm8*16			
31	Springm5*10			
32	Cross pin			
33	Screw m5			
34	Springm6*12			
35	Lock block			
36	Springm6			
37	Spring			

No	Parts Name	Pcs	Seri No	INR
38	Spring washer ф8			
39	Springm6*16			
40	Spring			
41	Spring hook			
42	Handle bracket			
43	Right handle			
44	Springm6*40			
45	Switch			
46	Springm4*14			
47	Press line plate of cable			
48	Cable 2c*0.75mm²*2.2m			
49	Outgoing line 2c*0.75mm²*0.8m			
50	Cable sheath			
51	Springm4*16			
52	Left handle			
53	Springm5*16			
54	Flat washer ф6			
55	Sleeve			
56	Flat washer ф5			
57	Plate			
58	Transparent cover retaining plate			
59	Transparent cover			
60	Transparent cover spring			
61	Screw m5*8			
62	Transparent cover plate			
63	Screw m8*16			
64	Outside flange			
65	Ring			
66	Inside flange			
67	Washer ф40			
68	Bearing 6203			
69	Spindle			
70	Key 5*5*16			
71	Bearing 6202			
72	Blade cover			
73	Screw m6*20			
74	Screw m8*25			

Polymak®

PM255BMS-DY SPARE PARTS LIST

No	Parts Name	Pcs	Seri No	INR
75	Blet wheel			
76	Flat washer ф6			
77	Screw m6*16			
78	Belt			
79	Belt cover			
80	Screw m5*45			
81	Lock sping			
82	Washer ф7			
83	Lock pin			
84	White plate			
85	Crimping plate			
86	Screw m4*12			
87	Rotor			
88	Bearing 6200			
89	Screw m5*60			
90	Stator			
91	Spring			
92	Brush holder cap			
93	Carbon brush			
94	Brush holder			
95	Motor housing			
96	Screw m5*25			
97	Back cover			
98				
99				
100				
101				
102	Spanner			
103	Outlet			
104	Ties			
105	Dust bag			
106	Label			
107	The manual book			
108	Form			
109	Carton			
110				
111				

No	Parts Name	Pcs	Seri No	INR