Polymak®

PMCV3M 3M CONCRETE VIBRATOR

Needle size:	3m
No load speed:	12000r/min
Power:	1100W
Weight:	2.2KG

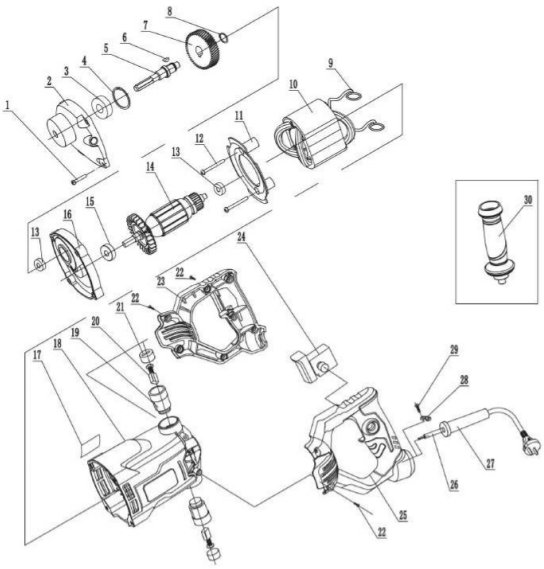

Polymak®

PMCV3M SPARE PARTS LIST

No	Parts Name	Pcs	Seri No	INR	No	Parts Name	Pcs	Seri No	INR
1	Screw ST5*35	4							
2	Gear Box	1							
3	Bearing 6201	1							
4	Ring 32	1							
5	Spindle	1							
6	Key 3*3.7*10	1							
7	Big Gear	1							
8	Washer 12	1							
9	Tension Spring	2							
10	Filed Coil	1							
11	Windshield	1							
12	Screw ST4*16	2							
13	Bearing 608	2							
14	Armature	1							
15	Bearing 6200	1							
16	Middle Cover	1							
17	Nameplate	1							
18	Housing	1							
19	Brush Holder	2							
20	Carbon Brush	2							
21	Brush Cover	2							
22	Screw ST4*16	9							
23	Left Handle	1							
24	Switch	1							
25	Right Handle	1							
26	Cable	1							
27	Cable Protector	1							
28	Cable Clamp	1							
29	Screw ST4*14	2							
30	Side Handle	1							