Polymak®

PMLDM6B

ELECTRIC DRILL

Chuck capacity:	10mm
No load speed:	0-3000r/min
Power:	400W
Weight:	1.4kg

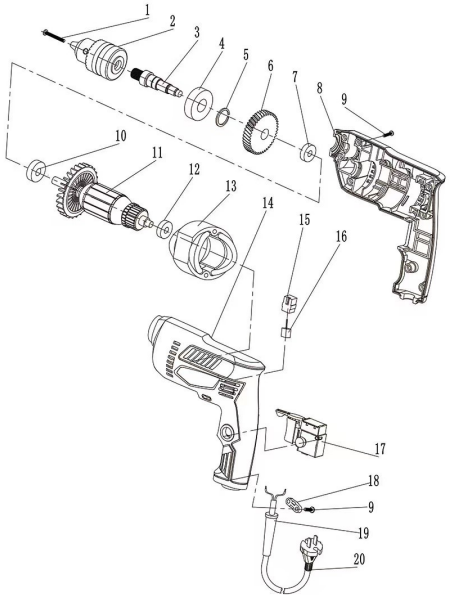

Polymak®

PMLDM6B SPARE PARTS LIST

No	Parts Name	Pcs	INR
1	Screw M5 × 18	1	
2	Chuck	1	
3	Spindle	1	
4	Bearing 6001	1	
5	Washer 12	1	
6	Big Gear	1	
7	Bearing 606	1	
8	Housing Left	1	
9	Screw ST4x14	9	
10	Bearing 608	1	
11	Armature	1	
12	Bearing 627	1	
13	Filed Coil	1	
14	Housing Right	1	
15	Brush Holder	2	
16	Carbon Brush	2	
17	Switch	1	
18	Cable Clamp	1	
19	Cable Protector	1	
20	Cable	1	
21			
22			
23			
24			
25			
26			
27			
28			
29			
30			
31			