Polymak®

PM-CBR-18VBL BRUSHLESS CHARGING BLOWER

Voltage:	18V
Battery Capavity :	4.0Ah
No Load Speed:	0-24000rpm
Maxwind Volume:	8.4m³/min
Maxwind Velocity:	46.5m/s

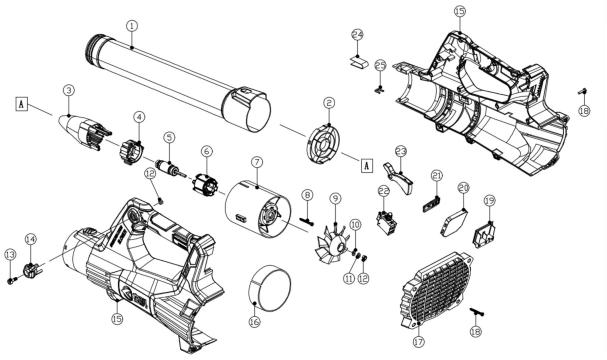

Polymak®

PM-CBR-18VBL SPARE PARTS LIST

No	Parts Name	Pcs	Seri No	INR	No	Parts Name	Pcs	Seri No	INR
1	Air outlet pipe	1							
2	Protective net	1							
3	Guide cone	1							
4	Motor barrel back cover	1							
5	Rotor	1							
6	Stator	1							
7	Motor barrel	1							
8	ST3.5*50 Screw	3							
9	Wind blade	1							
10	5*10*0.5 Flat pad	1							
11	M5 spring washer	1							
12	M5 lock nut	2							
13	M5 * 20 hexagonal socket with gasket	1							
14	Navigation button	1							
15	Housing	1							
16	Foam strip	2							
17	Housing cover	1							
18	ST4*18 Screw	17							
19	Pin	1							
20	Control panel	1							
21	801 Bracket	1							
22	Switch	1							
23	Switch trigger	1							
24	Shrapnel	1							
25	Snap	2							
26	Battery pack	1							
27	Charger	1							
28	Color box	1							
29	Accessory color box	1							
30	Tool strap	1							