Polymak®

Solutions Provider For Industry & Trade

PM-CID-18VB-2B IMPACT DRIVER

Battery voltage:	18V
No load speed:	0-2600rpm
Battery capacity:	1.5Ah
Torque max.:	105Nm

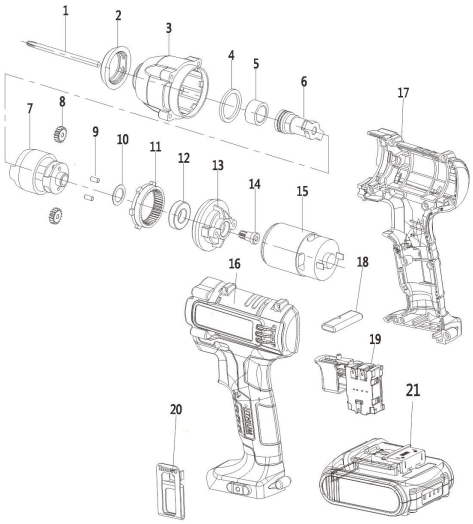

Polymak®

Solutions Provider For Industry & Trade

PM-CID-18VB-2B SPARE PARTS LIST

No	Parts Name	Pcs	Seri No	INR	No	Parts Name	Pcs	Seri No	INR
1	Screwdriver head	1			57				
2	Rubber sleeve	1			58				
3	Aluminum head shell	1			59				
4	Nylon gasket	1			60				
5	Axle sleeve	1			61				
6	Principal axis	1			62				
7	Tooth assembly	1			63				
8	Planetary gear	2			64				
9	Planetary gear steel pin	2			65				
10	Steel pin baffle	1			66				
11	Locating gear ring	1			67				
12	6901 Bearing	1			68				
13	Total set	1			69				
14	Transmission shaft	1			70				
15	Electric machinery	1			71				
16	Left housing	1			72				
17	Right housing	1			73				
18	Forward and reverse shift	1			74				
19	Switch	1			75				
20	Case hanger	1			76				
21	Battery pack	1			77				
22					78				
23					79				
24					80				
25					81				
26					82				
27					83				
28					84				
29					85				
30					86				
31					87				
32					88				
33					89				
34					90				
35					91				
36									
37									
38									
39									
40									
41									
42									
43									
44									
45									
46									
47									
48									
49									
50									
51									
52									
53									
54									
55									
56									