Polymak®

Solutions Provider For Industry & Trade

## PM-CDD-18V-2B DRILL DRIVER

| | |
|---|---|
| Battery voltage: | 18V |
| No load speed: | 0-450/0-1700rpm |
| Battery capacity: | 1.5Ah |
| Torque max.: | 54/21Nm |

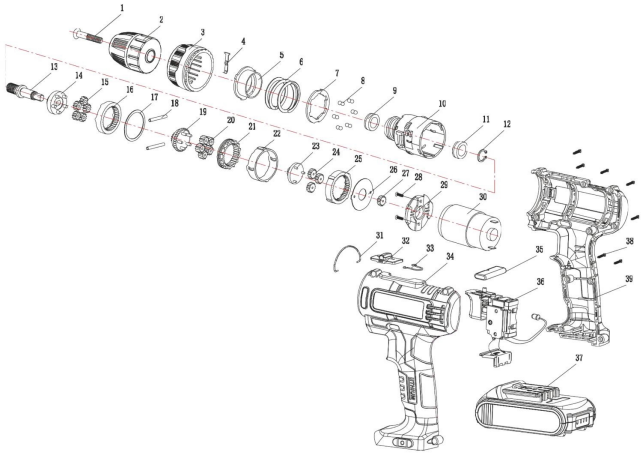




Polymak®

Solutions Provider For Industry & Trade

# PM-CDD-18V-2B SPARE PARTS LIST

| No | Parts Name | Pcs | Seri No | INR | No | Parts Name | Pcs | Seri No | INR |
|---|---|---|---|---|---|---|---|---|---|
| 1 | Anti tooth screw | 1 | | | 57 | | | | |
| 2 | Drill chuck | 1 | | | 58 | | | | |
| 3 | Torque cup | 1 | | | 59 | | | | |
| 4 | T shrapnel | 1 | | | 60 | | | | |
| 5 | Thread ring | 1 | | | 61 | | | | |
| 6 | 2.7 spring | 1 | | | 62 | | | | |
| 7 | Pattern gasket | 1 | | | 63 | | | | |
| 8 | φ4 steel ball | 12 | | | 64 | | | | |
| 9 | 689 bearing | 1 | | | 65 | | | | |
| 10 | Gearbox | 1 | | | 66 | | | | |
| 11 | Axle sleeve | 1 | | | 67 | | | | |
| 12 | φ9 Axle retaining ring | 1 | | | 68 | | | | |
| 13 | Principal axis | 1 | | | 69 | | | | |
| 14 | Five grasping plate | 1 | | | 70 | | | | |
| 15 | First stage planetary gear | 5 | | | 71 | | | | |
| 16 | Inner gear ring | 1 | | | 72 | | | | |
| 17 | Large hole gasket | 1 | | | 73 | | | | |
| 18 | Steel Pin | 2 | | | 74 | | | | |
| 19 | Double disk tooth | 1 | | | 75 | | | | |
| 20 | Second stage planetary gear | 5 | | | 76 | | | | |
| 21 | Speed governing gear ring | 1 | | | 77 | | | | |
| 22 | Snare | 1 | | | 78 | | | | |
| 23 | Center wheel | 1 | | | 79 | | | | |
| 24 | Third stage planetary gear | 3 | | | 80 | | | | |
| 25 | Positioning gear | 1 | | | 81 | | | | |
| 26 | Locating gasket | 1 | | | 82 | | | | |
| 27 | Motor gear | 1 | | | 83 | | | | |
| 28 | ST3*6 | 2 | | | 84 | | | | |
| 29 | Motor end cover | 1 | | | 85 | | | | |
| 30 | Motor 550 | 1 | | | 86 | | | | |
| 31 | Shift wire | 1 | | | 87 | | | | |
| 32 | Shift block | 1 | | | 88 | | | | |
| 33 | Shift block wire | 1 | | | 89 | | | | |
| 34 | Left housing | 1 | | | 90 | | | | |
| 35 | Forward and reverse shift | 1 | | | 91 | | | | |
| 36 | Switch module | 1 | | | | | | | |
| 37 | Battery pack assembly | 1 | | | | | | | |
| 38 | ST3*15 | 1 | | | | | | | |
| 39 | Right housing | 1 | | | | | | | |
| 40 | | | | | | | | | |
| 41 | | | | | | | | | |
| 42 | | | | | | | | | |
| 43 | | | | | | | | | |
| 44 | | | | | | | | | |
| 45 | | | | | | | | | |
| 46 | | | | | | | | | |
| 47 | | | | | | | | | |
| 48 | | | | | | | | | |
| 49 | | | | | | | | | |
| 50 | | | | | | | | | |
| 51 | | | | | | | | | |
| 52 | | | | | | | | | |
| 53 | | | | | | | | | |
| 54 | | | | | | | | | |
| 55 | | | | | | | | | |
| 56 | | | | | | | | | |