Polymak®

Solutions Provider For Industry & Trade

PM-CDD-12V-2B DRILL DRIVER

Battery voltage:	12V
No load speed:	0-350/0-1300rpm
Battery capacity:	1.5Ah
Torque max. (hard/soft):	30/13Nm

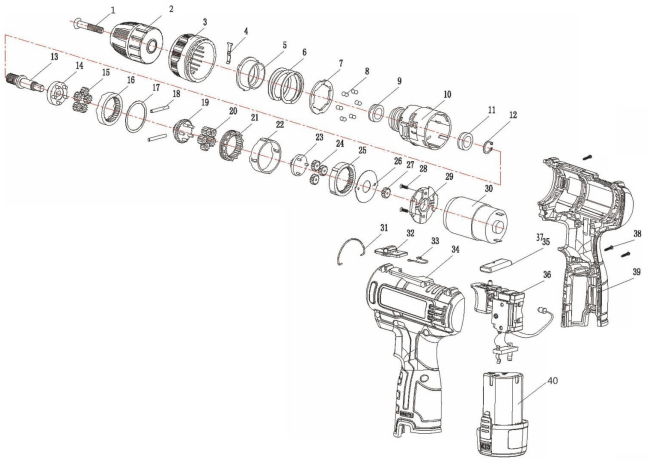

Polymak®

Solutions Provider For Industry & Trade

PM-CDD-12V-2B SPARE PARTS LIST

No	Parts Name	Pcs	Seri No	INR
1	Anti tooth screw	1		
2	Drill chuck	1		
3	Torque cup	1		
4	T shrapnel	1		
5	Thread ring	1		
6	2.7 spring	1		
7	Pattern gasket	1		
8	φ4 steel ball	12		
9	689 bearing	1		
10	Gearbox	1		
11	Axle sleeve	1		
12	φ9 Axle retaining ring	1		
13	Principal axis	1		
14	Five grasping plate	1		
15	First stage planetary gear	5		
16	Inner gear ring	1		
17	Large hole gasket	1		
18	Steel Pin	2		
19	Double disk tooth	1		
20	Second stage planetary gear	5		
21	Speed governing gear ring	1		
22	Snare	1		
23	Center wheel	1		
24	Third stage planetary gear	3		
25	Positioning gear	1		
26	Locating gasket	1		
27	Motor gear	1		
28	ST3*6	2		
29	Motor end cover	1		
30	Motor 550	1		
31	Shift wire	1		
32	Shift block	1		
33	Shift block wire	1		
34	Left housing	1		
35	Forward and reverse shift	1		
36	Switch module	1		
37	Battery pack assembly	1		
38	ST3*15	1		
39	Right housing	1		
40	Casing buckle	2		
41				
42				
43				
44				
45				
46				
47				
48				
49				
50				
51				
52				
53				
54				
55				
56				

No	Parts Name	Pcs	Seri No	INR
57				
58				
59				
60				
61				
62				
63				
64				
65				
66				
67				
68				
69				
70				
71				
72				
73				
74				
75				
76				
77				
78				
79				
80				
81				
82				
83				
84				
85				
86				
87				
88				
89				
90				
91				